US007155855B2

(12) **United States Patent**
Mauch et al.

(10) **Patent No.: US 7,155,855 B2**
(45) **Date of Patent: Jan. 2, 2007**

(54) **FIREARMS PROTECTED FROM UNAUTHORIZED USE**

(75) Inventors: **Ernst Mauch**, Dunningen (DE); **Michael Schumacher**, Fluorn-Winzeln (DE)

(73) Assignee: **Heckler & Koch GmbH**, Oberndorf/Neckar (DE)

(*) Notice: Subject to any disclaimer, the term of this patent is extended or adjusted under 35 U.S.C. 154(b) by 0 days.

(21) Appl. No.: **10/763,374**

(22) Filed: **Jan. 23, 2004**

(65) **Prior Publication Data**

US 2005/0000139 A1 Jan. 6, 2005

Related U.S. Application Data

(63) Continuation-in-part of application No. PCT/EP02/08306, filed on Jul. 25, 2002.

(30) **Foreign Application Priority Data**

Jul. 25, 2001 (DE) 101 36 287

(51) **Int. Cl.**
F41A 17/00 (2006.01)
F41A 17/06 (2006.01)

(52) **U.S. Cl.** **42/70.01**; 42/70.11

(58) **Field of Classification Search** 42/70.01, 42/70.11

See application file for complete search history.

(56) **References Cited**

U.S. PATENT DOCUMENTS

4,440,063	A	4/1984	Zangrando	
4,467,545	A	8/1984	Shaw, Jr.	
4,682,435	A	7/1987	Heltzel	
5,016,376	A *	5/1991	Pugh	42/70.11
5,022,175	A	6/1991	Oncke et al.	
5,074,189	A	12/1991	Kurtz	
5,303,495	A	4/1994	Harthcock	
5,459,957	A *	10/1995	Winer	42/70.11
5,546,690	A	8/1996	Ciluffo	
5,560,135	A	10/1996	Ciluffo	
5,570,528	A *	11/1996	Teetzel	42/70.11
5,603,179	A	2/1997	Adams	
5,636,464	A	6/1997	Ciluffo	
5,713,150	A *	2/1998	Ealovega	42/84
5,896,691	A	4/1999	Kaminski et al.	
5,915,936	A	6/1999	Brentzel	
5,924,232	A	7/1999	Rhoden et al.	
5,946,840	A	9/1999	Mickel	
6,185,852	B1	2/2001	Whalen et al.	

(Continued)

FOREIGN PATENT DOCUMENTS

DE 3446019 A1 * 6/1986

(Continued)

OTHER PUBLICATIONS

English Translation of International Preliminary Examination Report for international patent application PCT/EP02/08306.

(Continued)

Primary Examiner—Michael J. Carone
Assistant Examiner—Bret Hayes
(74) *Attorney, Agent, or Firm*—Hanley Flight & Zimmerman, LLC

(57) **ABSTRACT**

Firearms protected from unauthorized use. A disclosed firearm comprises a housing having a handle; a safety located in the housing to selectively prevent firing; and a module removably attachable to the handle and containing an electronic identification device to identify an authorized user. The electronic identification device controls the safety to prevent firing by unauthorized persons and to permit firing by the authorized user.

25 Claims, 5 Drawing Sheets

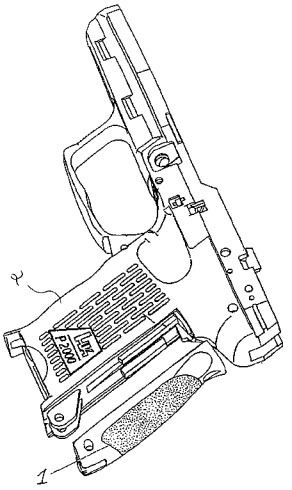

U.S. PATENT DOCUMENTS

6,351,906	B1 *	3/2002	Honig et al.	42/70.11
6,357,156	B1 *	3/2002	Klebes et al.	42/70.11
6,363,647	B1 *	4/2002	Kaminski	42/70.11
6,412,207	B1 *	7/2002	Crye et al.	42/70.06
6,477,801	B1 *	11/2002	O'dwyer	42/70.11
6,481,140	B1 *	11/2002	Marshall	42/70.11
6,678,984	B1 *	1/2004	Rapp et al.	42/70.11

FOREIGN PATENT DOCUMENTS

DE	OS 198 05 306	8/1999
DE	OS 198 31 690	9/1999
JP	0040109300AA	4/1992
JP	0100258178AA	9/1998
WO	WO A 98/55817	12/1998
WO	WO 00/26848 A1	5/2000

OTHER PUBLICATIONS

International Search Report for PCT/EP02/08306.

* cited by examiner

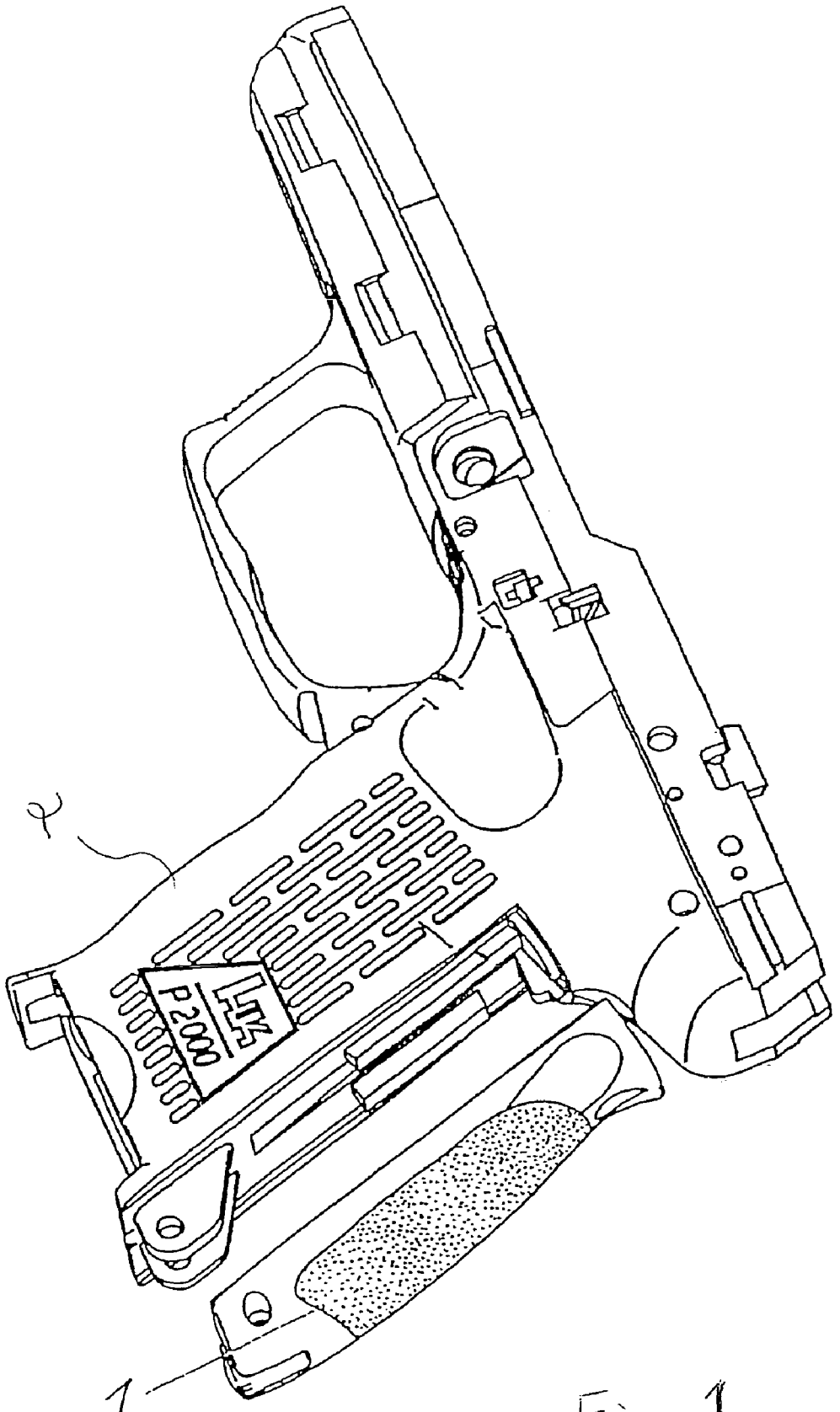

Fig. 1

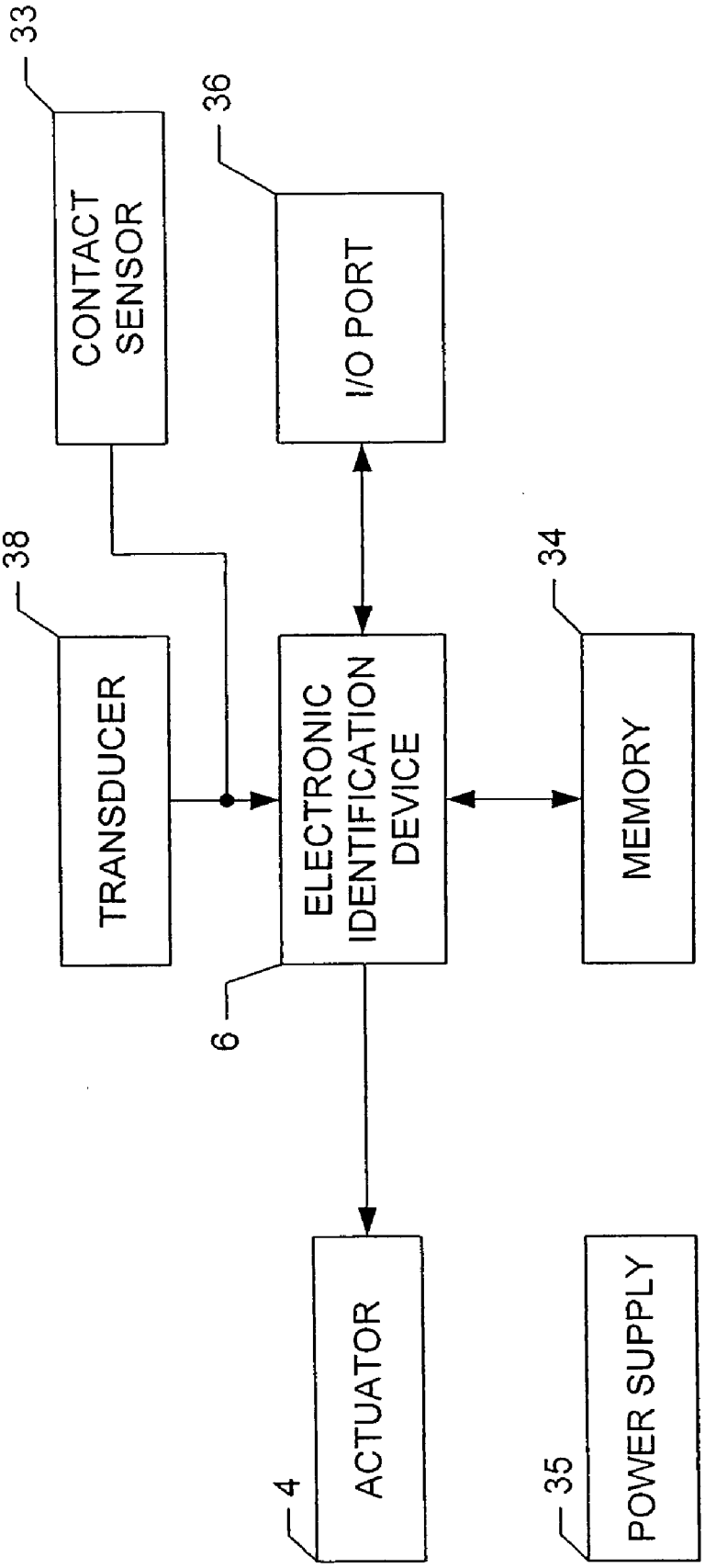
33
CONTACT SENSOR
36
I/O PORT
38
TRANSDUCER
ELECTRONIC IDENTIFICATION DEVICE
34
MEMORY
6
4
ACTUATOR
35
POWER SUPPLY

FIG. 2

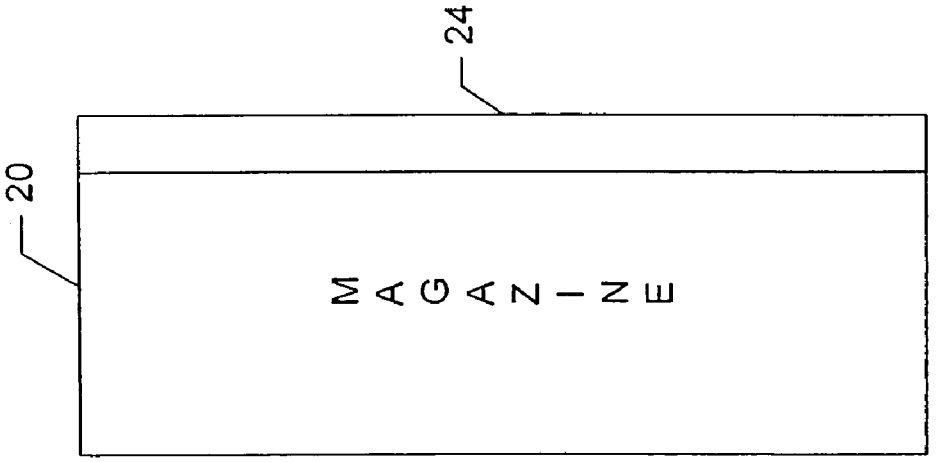

FIG. 4

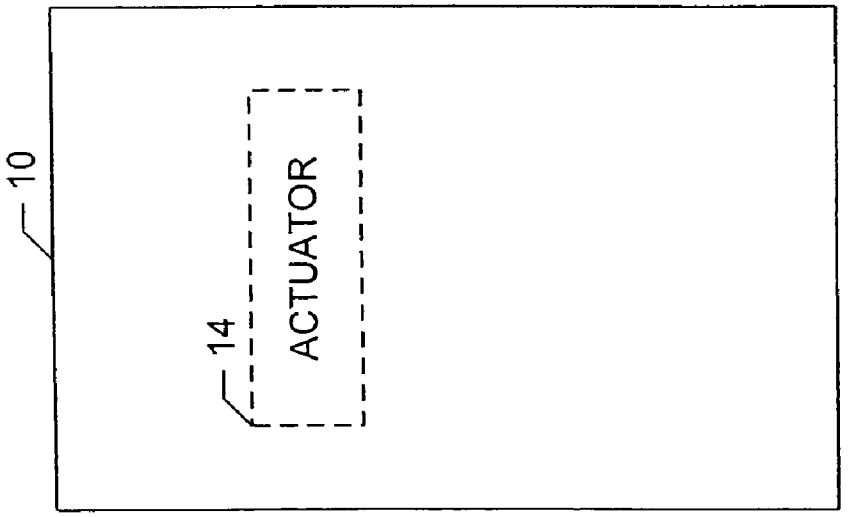

FIG. 3

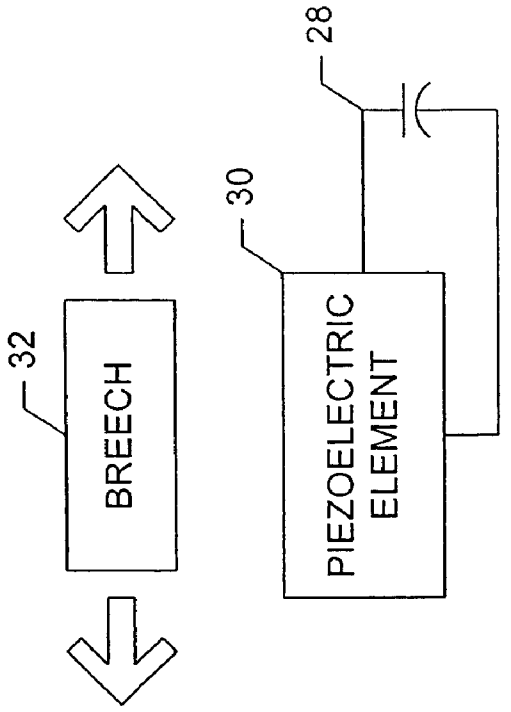

FIG. 6

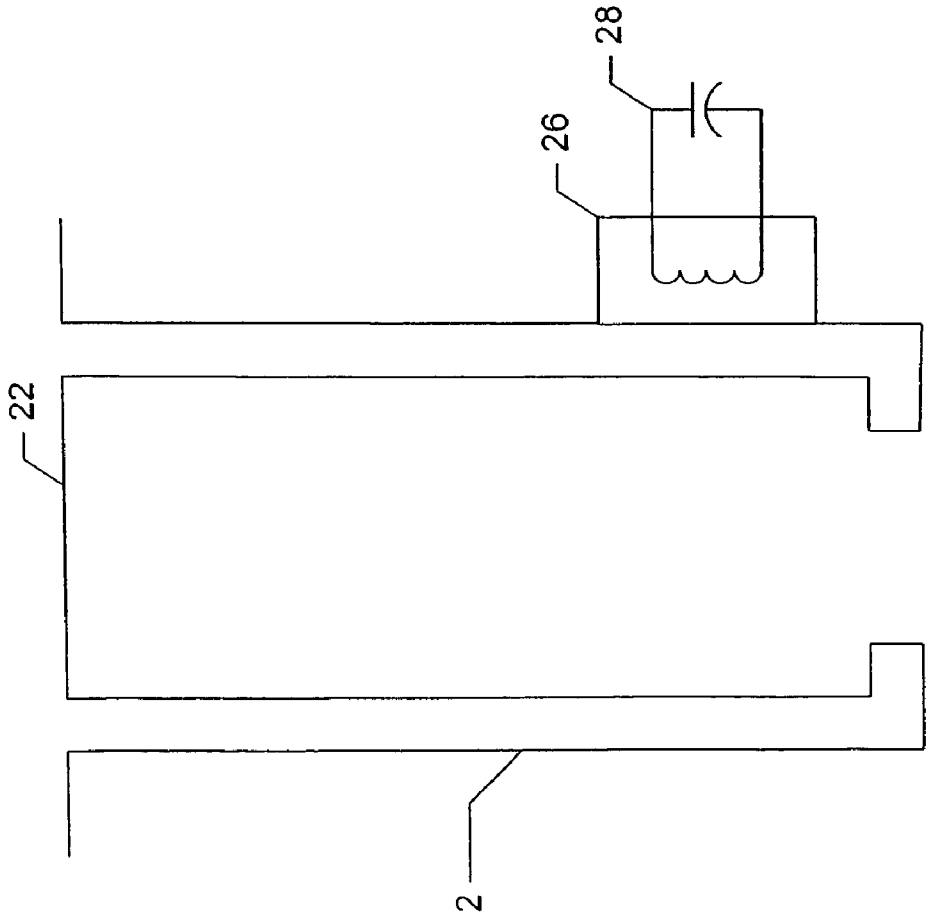

FIG. 5

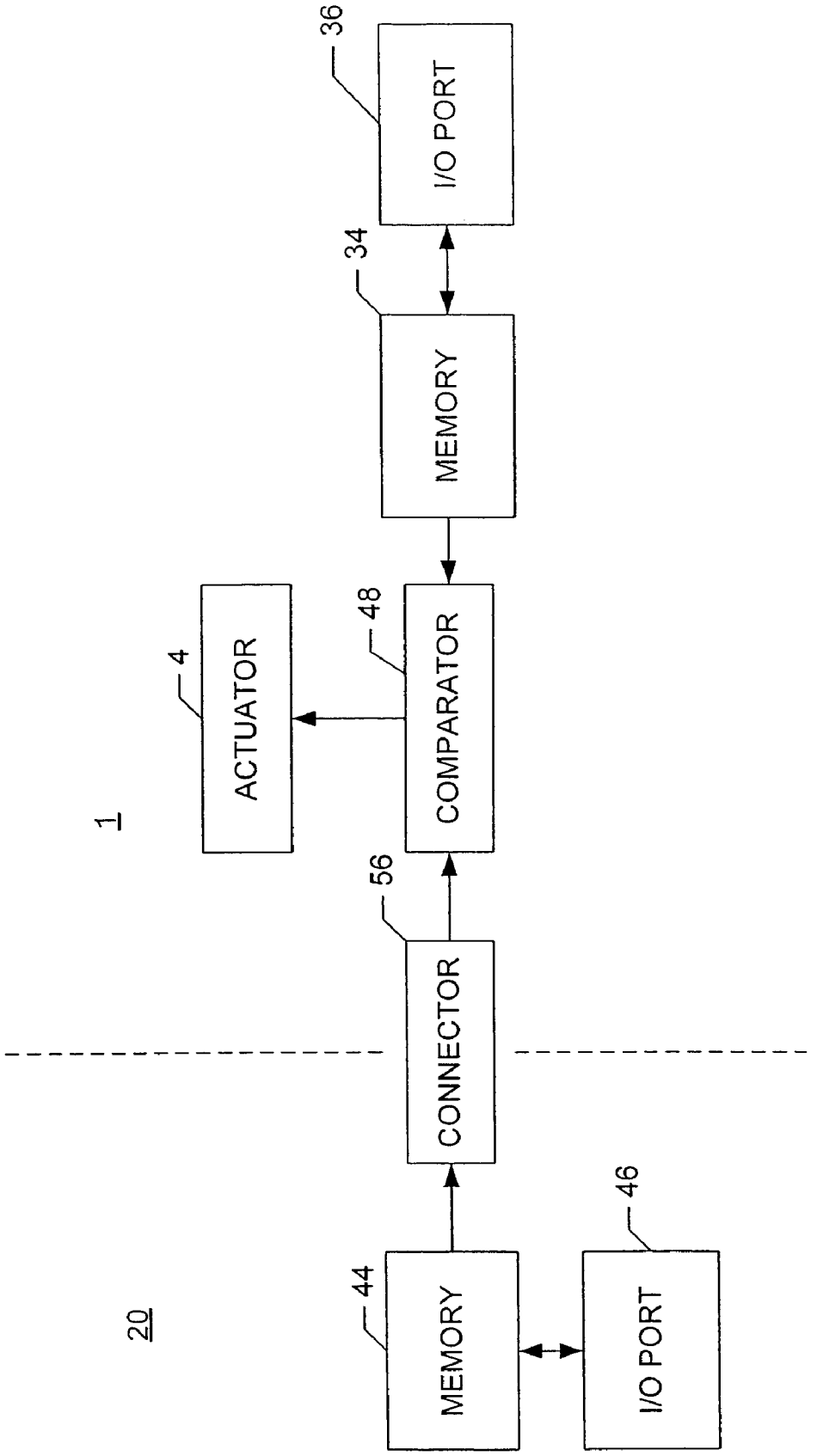
36
I/O PORT
34
MEMORY
48
COMPARATOR
4
ACTUATOR
1
56
CONNECTOR
20
44
MEMORY
46
I/O PORT

FIG. 7

FIREARMS PROTECTED FROM UNAUTHORIZED USE

RELATED APPLICATION

This patent arises from a continuation-in-part of international patent application Ser. No. PCT/EP02/08306, which was filed on Jul. 25, 2002 and has a priority date of Jul. 25, 2001.

FIELD OF THE DISCLOSURE

This disclosure relates generally to firearms, and, more particularly, to firearms protected from unauthorized use.

BACKGROUND

The clamor for precautions preventing the use of small firearms by unauthorized persons is increasing, in particular with respect to handguns.

One can subdivide small firearms into the following groups:

Weapons used in war:

Weapons used in war must be inexpensive and absolutely reliable. A safety, as simple as it might be, slows down the use of the weapon. Further, every soldier must be able to use every small arm he has been trained to use. For example, if his weapon is defective and he has access to the weapon of a fallen comrade, he must be able to use the comrade's weapon. Therefore, identifying/authorization devices which restrict usage of a weapon to a particular soldier are inappropriate as a rule.

Weapons used in civilian life:

Military, police, and even the employees of civilian security or personal protection companies may use weapons that, upon changing of a guard or a shift can take a certain amount of time to perform an identification routine to authorize the new personnel to use a weapon. During the watch, the mission, etc., the weapon should be ready to fire as quickly as possible. However, in the case of loss, the weapon preferably becomes immediately unusable. One or more specified persons must be authorized for use. The authorization must, however, be revocable.

Sporting weapons:

Sporting weapons can definitely require time for a user identification/authorization process that determines if the user is authorized to use the weapon. The weapon should, however, also be usable by a person other than the identified person if desired, for example, in the case of a loaned weapon. If a weapon is set aside, it does not have to become unusable immediately.

Private defense weapons:

Limiting authorization to identified users should be performed without entering code numbers or the like, since the user may forget the code numbers after years of not using the weapon. The batteries for an electric/electronic identification/authorization device also pose a problem, since they can overage. As a rule it will suffice if only one user of the weapon is identifiable as an authorized user.

Collector's weapons:

Such weapons are usually kept stationary. Therefore, it is sufficient in such cases to keep the weapon stored in a safe, in a secured armory, etc. Hunting weapons that are used only rarely also fall into this category. However, frequently used hunting weapons fall under the ~weapons used in civilian life" category or the ~sporting weapons " category, depending on the type of use.

As far as possible, weapons manufacturers attempt to manufacture one weapon, with slight modifications, for as many of the above categories of use as possible. While large caliber small arms of the same basic design can find application in all types of use; the requirements for the individual types of use are sometimes contradictory.

Fingerprint or handprint scanning systems for identifying/authorizing gun users have already been proposed. However, these systems are unsuitable in cases where, for example, the user is wearing a glove or a bandage on his hand, or when the hand has been soiled with paint, oil or mud.

Additionally the provision of pushbuttons or the like for entering a personal identification number for enabling usage of a weapon has been proposed. However this approach requires a special construction of the weapon in order to provide storage space for the pushbuttons.

Voice and speech detection devices to identify/authorize a user of a weapon have also been proposed. These systems do not given thought to the fact that high-pitched, excited or whispering voices sound differently than voices or words that were entered calmly beforehand in the weapons shop as a reference sample.

The following publications are known: U.S. Pat. No. 5,459,957; U.S. Pat. No. 5,546,690; U.S. Pat. No. 5,560,135; U.S. Pat. No. 5,570,528; U.S. Pat. No. 5,636,464; U.S. Pat. No. 5,924,232; Japanese patent document JP 0100258178AA; U.S. Pat. No. 5,603,179; U.S. Pat. No. 5,303,495; U.S. Pat. No. 4,682,435; U.S. Pat. No. 4,467,545; U.S. Pat. No. 5,022,175; Japanese patent document JP 0040109300AA; German patent document DE-OS 198 31 690 and German patent document DE-OS 198 05 306.

BRIEF DESCRIPTION OF THE DRAWING

FIG. **1** is a left, rear perspective view of an example automatic firearm.

FIG. **2** is a block diagram of an example identification module.

FIG. **3** is a block diagram of an example blank module.

FIG. **4** is a schematic view of an example magazine.

FIG. **5** is a cross-sectional view of an example magazine shaft of the firearm of FIG. **1**.

FIG. **6** is a schematic illustration of an example breech and piezoelectric device.

FIG. **7** is a block diagram of an example magazine and an example magazine identification module.

DETAILED DESCRIPTION

The example pistol of FIG. **1** has a module **1** which may be inserted into the rear of the handle **2**. A block diagram illustrating an example module **1** is shown in FIG. **2**. The module **1** has a safety or an actuator **4** for controlling the state of a safety of the pistol. The module **1** may also have an electronic identification device **6** such as a voice identification device, a speech identification device, and/or a magazine identification device. The voice identification device, the speech identification device, and/or the magazine identification device, if present, may control the state of the safety via the actuator **4**. For example, the safety **1** may only enter the ~ready to fire" state when the voice identification device, the speech identification device, and/or the magazine identification device outputs a signal indicating that the user of the weapon is an authorized user. This signal may cause

the actuator **4** to drive the safety by, for example, unblocking the firing pin, the trigger, or another portion of the trigger mechanism.

The module **1** may alternatively be a blank module **10** which, after being attached to the pistol either keeps the weapon's safety permanently on or permanently off until the module **10** is removed. In other words, rather than requiring the user to identify himself/herself by entering data (e.g., a voice command) into the module **10**, the blank module **10** could be configured to not require such data. In a case where the blank module **10** places the safety in a ready to fire state, possession of the blank module **10** (i.e., connection of the blank module **1** to the handle **2**) would serve as authorization to fire the weapon. In other words, as shown in FIG. **3**, the blank module **10** would not have an electronic identification device and, thus, would not serve to uniquely identify authorized users, but would instead have a mechanical actuator **14** for holding the safety in a released state whenever the module **10** is attached to the handle **2**. Of course, a blank module **10** designed to maintain the safety in the prevent firing condition, would not include the actuator **14**.

In the illustrated example, the weapon is powered by relative movement between two parts. In some examples, the moving parts are a magazine **20** and a magnetic or electrical device located in the magazine shaft **22** such that, inserting the magazine **20** into the magazine shaft **22** of the pistol generates a current surge, which supplies the energy for operation of the identification device **6** and the actuator **4**.

As shown in FIGS. **4** and **5**, a magnet **24** may be carried by the magazine **20** and a conductor **26** such as an inductor may be positioned adjacent to the travel path of the magnet **24** such that, upon insertion of the magazine **20** into the shaft **22**, current is induced in the conductor **26** which is delivered to an accumulator **28**.

In other examples, a piezoelectric quartz crystal **30** such as that shown in FIG. **6** is present which produces a current surge in response to the recoil of the breech **32** after each shot. Under either of the above approaches, the pistol does not require a battery or the like.

As shown in FIG. **2**, the module **1** may be provided with the actuator **4**, the electronic identification device **6** and a power supply **35**. The actuator **4** may be implemented by, for example, a magnetically driven pin. The electronic identification device **6** may be implemented by a logic circuit such as a microprocessor, an ASIC, or a hardwired circuit. The power supply **35** may be implemented by a conventional battery, but is preferably implemented by a capacitor **28** in combination with the conductor **26**, or a piezoelectric crystal **30** described above.

As explained in further detail below, the module **1** may be further provided with a memory **34** to store data useful in identifying authorized users, an input port **36** for receiving data (e.g., data identifying authorized users) and/or instructions, and/or one or more transducers **38** to collect user identification data such as voice commands or iris scans. The memory **34** can be implemented by, for example, flash memory. The input port **56** may be, for example, a universal serial bus (USB). The transducers may be, for example, a microphone or an optical sensor.

In the illustrated example, a contact sensor **33** (see FIG. **2**) is arranged on the rear of the module **1**. The contact sensor **33** may, for example, be a spring-biased, push-button switch that causes deactivation of the actuator **4** when released by, for example, dropping the weapon as explained further below.

Although not shown in the drawings, the module **1** may also extend further up then the module **1** shown in FIG. **1** and have an optical sensor **38** for iris recognition on the upper rear.

From the foregoing, persons of ordinary skill in the art will appreciate that firearms having an electronic identification/authorization device **6** have been disclosed. In the illustrated example, the device **6** for identifying/authorizing the shooter is located inside a module **1** which comprises a portion of the handle **2** of the firearm.

The module **1** with the identification device **6** can, if desired, be exchanged for another module **1** having a different identification device **6** and/or different identification data (e.g., a module that identifies one or more authorized users which may be different from the authorized user(s) identified by the first module) or with no identification device (e.g., a blank module **10** as explained above).

The power supply **35** for the identification device **6** of the module **1** and, if desired, for a magnetic drive **4** for operating the safety may be an accumulator such as a conventional storage battery or capacitor. If a capacitor is employed in this role, it is not a matter of actually storing current over the longest possible period of time, but rather it is a matter of reliably making the capacitor available over a very long period of time (e.g., decades) for the storage of current when needed.

In a preferred example, long-term batteries or long-term accumulators are not used. Instead, one or more short term storage devices which may be charged by the relative motion of two parts of the weapon are used. These moving parts may be, for example, a magnet **24** whose relative motion induces a current in a conductor **26**. This current may then be stored for only a short time, but it suffices to supply the electronic identification/authorization device **6** or safety actuator device **4** with sufficient current for the conventional time period of use. A weapon employing this type of storage device has the advantage that it can remain unused for years and nevertheless can be used immediately when needed, (for example, as a means of home defense), since the relatively movable parts will supply the weapon with the required electric current immediately prior to operation.

These relatively movable parts are preferably the magazine **20** and a conductor **26** located adjacent to the handle **2** or magazine shaft **22** (which is preferably located in the handle **2**) as shown in FIGS. **4** and **5**. While the presence of the current generating components may increase the force necessary to insert the magazine **20** into the magazine shaft **22**, this additional expenditure of force required by the presence of the current generating components is irrelevant since, in order to ensure that it reliably locks into place, the magazine **20** is typically pushed into the magazine shaft **22** with a relatively powerful jolt. Moreover, the weapon is made even more secure during storage, because the user is compelled to store the magazine **20** away from the weapon. In particular, because the insertion of the magazine **20** is necessary for operation of the weapon (i.e., to supply the power required to activate the identification/authorization device **6** and, thus, to release the safety), the magazine **20**, if it were to remain in the weapon, would have to be first removed from the weapon prior to operation, and then reinserted. Therefore, a user is likely to store the weapon without the magazine **20** in the shaft **22** or, if the magazine **20** is left in the weapon, the weapon will not be usable to fire until the magazine **20** is withdrawn and reinserted as explained above. Further, not only does the first loading of the automatic pistol generate the necessary current, but the accumulator **28** is also further charged or recharged with

each reloading operation. This design promotes the safety of the weapon, since the weapon is not stored with a bullet in the cartridge chamber, but rather in each case must be loaded prior to the first shot, provided the accumulator **28** is not already charged.

The relatively movable parts may alternatively be advantageously formed by the handle **2** on the one hand and by the breech **32** or by parts that are movable together with the breech **32** on the other hand.

Relatively moving parts may also be, for example, a movable front end or a cartridge cylinder whose rotation activates the identification device during the first cocking.

The above-mentioned accumulator **28** can also be provided only as an additional device for cases of emergency, together with a conventional battery or accumulator for normal operation. When such a firearm is used at, for example, a security company, the conventional battery or accumulator may be charged before each shift.

In another preferred example, a piezoelectric element **30**, (for example, a quartz crystal), is provided somewhere on the weapon (e.g., preferably in the handle **2**) to convert shock loads that occur, for example, when a shot is fired into electric voltage and ultimately into electric current which is conducted to the accumulator **28**. To this end, the piezoelectric quartz crystal **30** may be impinged by the breech **32**, by the recoil spring, by the combustion gases or by a gas piston propelled by the breech **32**, recoil spring or combustion gases when a shot is fired. Irrespective of the precise implementation mode selected, it is preferable that the recoil energy to which the quartz crystal **30** is exposed during shooting is used to cause the crystal **30** to generate the charging current.

In some examples, an electronically readable identification code is arranged on the magazine **20** such that the code is read from the weapon upon insertion of the module **1** into the handle **2**. This technique is particularly advantageous for weapons of the ˜used in civilian life" category. For example, under such an approach, each employee of a factory security company is issued a magazine **20** which bears a code identifying the corresponding employee. Prior to the shift, the weapons (e.g., the modules **1** of the weapons) to be used in the shift are programmed with the codes of the employees who are assigned to the shift. Now when a magazine **20** is inserted into one of the weapons, the safety of the weapon will only release if the magazine **20** bears the code of an employee assigned to the shift. This identification code on the magazine **20** can also be stored in the electronics (e.g., in the module **1**) of the weapon when the magazine **20** is inserted into the shaft **22**, so that, if the magazine code **20** is uniquely associated with a specific employee, one can later determine which employee carried the weapon (i.e., which magazine **20** was inserted into the weapon) by reading the memory of the weapon.

An example magazine identification system is shown in FIG. **7**. In the illustrated example, the system includes a memory **44** storing the magazine identification code and an input port **46** for programming the memory **44**. However, the input port **46** may be eliminated and the memory **44** may be replaced with another readable code such as an RF tag or a bar code.

In the illustrated system, the module **1** is simplified to include only an actuator **4** for driving the safety, a power supply **35** to power the module **1** (and possibly the electronics of the magazine **20**), a memory **34**, an input port **36**, and a comparator **48**. The actuator **4**, the power supply **35**, the memory **34** and the input port **36** may be implemented as explained above. The comparator **48** is structured to compare the magazine identification code from the memory **44** to one or more user authorization codes stored in the memory **34**. If a match occurs, the comparator **48** outputs a signal to actuate the safety actuator **4**. If no match occurs, the actuator **4** is not actuated.

As shown in FIG. **7**, a connector **56** may be provided to automatically couple the electronics of the magazine **20** and the module **1** when the magazine **20** is inserted into the shaft **22**.

This type of magazine identification system is advantageous in that the identification code can be read from the memory **44** with absolute accuracy (not just with relative accuracy), as in the case of a fingerprint identification system or the like. Under no circumstances is there any remaining uncertainty.

The magazine identification approach can also be coupled with one or more other methods of identification (e.g., a secondary identification method such as a voice detection or iris scanning method. Further, the level of scrutiny applied by the secondary identification method can be lower if the magazine identification shows a match. For example, if a weapon is loaded with an unidentified or incorrectly identified magazine **20**, the scrutiny level of the other identification method is increased (e.g., more bits of a voice comparison must match). The result is that, although a shooter who is forced to use a foreign magazine **20** will be able to use the weapon set up for him, shooting will only be permitted after a longer and more precise identification of features peculiar or specific to him. In the process, it could also be necessary for him to wash his hands before using the weapon when his fingerprints or handprints are checked.

If, on the other hand, the magazine **20** exhibits a correct identification code, the other identification methods can be coarsened and, thus, shortened or dispensed with altogether (e.g. fewer bits in an optical iris scan comparison must match to release the weapon for firing).

In some examples, the identifying device **6** includes a microphone **38** (see FIG. **2**). In such circumstances, this microphone **38** is used for sound recording (e.g., to prerecord voice commands from an authorized user for later identification/authorization). For example, the microphone **38** may be used to pick up a whistle emitted by a special whistle that belongs to an authorized user of the weapon and whose frequency results in or contributes toward the release of the weapon's safety. A sound sequence from a sound generator can also, similar to a remote-call telephone answering machines, be picked up by the microphone **38** and fed to the evaluation device **6**. On the other hand, the microphone **38** can also detect the sound of fired shots such that their number can be recorded in the memory **34**. Recording the number of shots may, for example, comprise recording the time of each shot heard by the microphone **38** in the memory **34**.

Preferably, the microphone **38** is coupled with a voice and/or a speech (word) recognition device **6**. This device **6** recognizes a speaking voice or a spoken word by comparing a speech frequency trend with a pre-stored word or with several pre-stored words from the memory **34**. There is already a broad state of the art here, and the problems that result from the presence of strong background noise and the like have been largely solved (for example, in the voice operation of motor vehicles). However, arranging the device **6** together with the microphone **38** exclusively in the handle **2** of a firearm is new.

In a state of emergency the problem with background noises can also be present, for example, shouting, shots etc. However there are additional problems: (a) it may be

necessary to only whisper the voice or speech sample (for example, if there are intruders in the house) to release the safety for firing, (b) the excitement during a state of emergency can distort the authorized user's voice, or (c) the user may be hoarse or impaired. In all of these cases the recognition device **6** must reliably release the weapon for authorized users and bar usage for unauthorized users. In some example implementations, these changes in the sound of the user's voice are taken into consideration. For example, words are determined for which the changes in the sound of the voice have only slight effect, further word patterns are saved that have been recorded and stored with screaming, whispering, normal and hoarse voice. In the process, the identification criteria can, if necessary, be coarsened, if an earlier preliminary check (for example, by means of the aforementioned magazine identification system) has been performed.

None of the known voice or speech identification devices take such fluctuations of the sound of the user's voice into consideration.

Preferably, the identification device is adaptive. That is, it adapts to the user's voice, which changes over the course of time, over and over again. With an adaptive device, the user frequently inputs spoken commands to release the safety often during the first couple of days immediately after the purchase of a weapon, whereby one will discover that the recognition device becomes more and more reliable, until it is totally reliable.

As already mentioned earlier, the microphone **38** is preferably provided with a recording device **34**, which records at least the last predetermined number of shots; preferably in association with other data such as, for example, the time and/or the identity of the shooter. The recording capacity of the memory **34** can be relatively small, so that only the last couple of dozen shots are recorded. In this way it is possible, for example, to more easily clear up an incident in which shots were fired with the weapon, than previously was the case.

It is also no longer possible for security personnel to use their weapons, (for example, with privately procured ammunition), during a shift outside their official functions for target practice, as previously took place now and then. For after the shift, the recording device **34** can then be routinely read out via the port **36** and, with this information, it could be determined when and who fired shots.

The electronics/electronic equipment can have a timer for identifying the time of the shots. Better yet, a radio-controlled clock, which bridges the radio pauses by means of eigenfunction, but in case of resumed radio communication automatically corrects any errors that have occurred could be employed. The recorded time is, in this case, always correct.

The recording device **34** can also be designed so that all events are stored that can be of importance for the function of the weapon. For example, it is possible to couple the maintenance or the necessary decommissioning of the individual weapon with the history of the weapon much better than was possible previously. For example, if one and the same pistol was always taken from the many automatic pistols of an infantry battalion for practice shooting, then this pistol will be exposed to unusual and unexpected strains. Up to now it has not been possible to determine this unusual usage pattern, so that failures occurred from time to time. With the recording device **34** explained above, the overall load or usage pattern of the weapon can be retrieved at any time, and the weapon can be taken out of commission before material fatigue occurs. To this end, the system of FIG. **7** could be modified so that the memory **44** and the port **46** are located in the housing of the firearm (i.e., not in the magazine **20**), and a code uniquely identifying the firearm is stored in the memory **44**. As explained above, rather than storing the code in memory **44**, other machine-readable codes (e.g., an RF tag, a bar code, etc.) could be employed to identify the weapon.

The described voice and speech recognition system is primarily of importance for weapons of the ~weapons used in war," ~weapons used in civilian life," and ~private defense weapons" categories, which are used in circumstances wherein incidents can arise in which it is necessary to shoot instinctively from the hip, instead of using the provided sight. This is in contrast to the ~sporting weapons" category, in which the shooter typically places the weapon in the correct firing position before firing the shot. In this case, the weapon ideally does not have the safety off until it is in the firing position, not only to prevent use by unauthorized persons, but also to avoid security problems in unshouldering and operating the weapon.

For the sporting weapons case, a measuring device for iris recognition may be used. The iris recognition device includes an optical sensor **38** and, if necessary, a small infra-red searchlight. These two elements can also be arranged on top at the rear of the handle **2** on handguns and be aligned in such a way that the optical axes of these devices intersect each other at arm's length behind the weapon and intersect the line of sight.

However, it is also possible to integrate the optical sensor **38** and the infra-red searchlight into one optical sighting mechanism, (for example a telescopic sight), whereby mirrors are used to ensure that all optical axes coincide.

Iris recognition devices have already been developed that are ready for production, (for example, for use in door opening equipment or with check cards or automatic teller machines). Thus, the operation of these devices is well known and will not be explained further herein.

In some examples, the identification device **6** and the preferably electromagnetic actuator **4** of the safety are located in one removable module **1**. The module **1** forms a part of the handle **2** and can be exchanged for another module. This approach is of particular importance for users of weapons of the ~weapons used in civilian life" category, that is, to users who share a common service weapon. In this case, each user may have his own module **1** and, at the beginning of his shift, he receives a weapon without a module. By inserting his module **1** into the handle **2**, this weapon, in a manner of speaking, becomes his own weapon, which only identifies him and only records the shots he fires. This solves the problem of fluctuating personnel, (for example, in the case of unpleasant guard details for whose surveillance the personnel is only assigned in rotation). It is not necessary to reprogram the electronics of the existing weapon for each newly arriving or departing person, since each person has their own electronics in their own module **1**. It is also possible to use any of several weapons that are identical in construction with the module **1**. Thus, if one weapon requires maintenance or repair, another may be employed in its stead. By virtue of the module **1**, any weapon can become a personal weapon assigned to a specified employee.

Of course it is possible to also provide the weapons with identification codes that correspond, for example, to their serial number, and to record the identification code in the module **1** when the module **1** is coupled to the firearm. For example, the serial number of the firearm may be stored in a memory **44** of the weapon and written to the memory **34**

of the module **1** whenever the module **1** is connected to the firearm, when a shot is fired, etc. In this way it is possible from the data recorded in the module **1** to infer the individual weapon that a person to whom the module **1** is assigned was carrying at a specific time.

At a minimum, the module **1** controls the safety. The actuator **4** is preferably designed in such a way that the weapon automatically has its safety on after the module **1** has been removed and remains with the safety on until a new module is inserted which activates the weapon after a successful identification/authorization process. The safety can for example be a spring-suspended safety bolt constructed on the weapon, which in its resting position engages the spring guide of the firing-pin spring and locks it. The actuator **4** can be an electromagnet, which is mounted in the module **1** and moves the safety bolt from its resting position if the identification/authorization process was successful.

Additionally it is advantageous to provide a blank module **10**, which can be inserted in place of the identification module **1**, and which, in the process, releases the safety of the weapon. In this way, it is possible by means of the blank module **10** to produce military weapons of the ~weapons used in war" category without having to make any changes to the actual weapon.

It is also possible for a private individual, who, for example, is leaving for a hunting expedition, to equip his weapon beforehand with such a blank module **10** in order to be able to have the weapon ready to fire in case of emergency without performing the identification routine. A home protection weapon which is intended to be used by more than one person can also have a blank module **10**, provided it can be ensured that the weapon cannot fall into the hands of unauthorized persons. The manufacturer of such a weapon, which he offers with an identification module **1**, can be free from product liability if the customer installs a blank module **10** after purchasing the weapon, but then does not store the weapon safely, so that an unauthorized person causes damage with it.

As used herein the term ~blank module" refers to a module that holds a safety in a released condition and to a module that is completely functionless and does not release the safety of the weapon. Thus, the term ~blank module" encompasses ~safety always off' blank modules" as described in the immediately proceeding paragraph, and ~safety always on blank modules." Be With a safety always on blank module **10** it is possible to show weapons in a display window, hand them over to a customer for viewing purposes, or to use them at home as a room decoration. In such cases, stealing of the weapon by unauthorized persons is not ruled out. However, the unauthorized person will not be able to use this weapon because the safety is on and he is unable to release the safety.

An assortment of different modules can be offered, which take into account every intended application of the weapon and all legal requirements. A defective module can, for example, be sent to the manufacturer or to the repair shop for service without having to take safety precautions for its transport. The weapon can be equipped with a new module **1**, for example, if in the future further refined identification devices become available, because the basic weapon has the same design. As a result, production is simplified and lower in cost, regardless of how different the interchanged modules might be.

The modules **1** may be structured such that a special tool similar to a key is necessary for their removal, so that the replacement of modules is not easily possible. Strictly restricting distribution of such tools ensures that only each dealer gets such a tool and will not pass it on.

Particularly with handles **2** that do not accept a magazine, such as, for example certain sports pistols, the placement of a module **1** which forms the bottom part of the handle **2** is possible.

However, it is advantageous to have the module **1** form the rear portion of the handle **2**. As a result, the module **1** may also form a part of the magazine shaft **22** towards the front (for example, in automatic pistols), so that a magazine identification code can be read and the insertion of the magazine **20** can be used to generate current as explained above. Towards the rear, the module **1** can, if desired, protrude above the hand holding the handle **2** and carry the sensor **38** for iris recognition.

In some examples, a contact sensor **33** is arranged on the rear of the module **1**. This contact sensor **33** is coupled with the safety and engages the weapon's safety or even erases the identification data from the memory **34**, **44** when the weapon slips from the hand. The weapon is, thus, especially well suited for the ~weapons used in civilian life" category. The contact sensor **33** can be a mechanical sensor such as a conventional thumb safety, or it can be an electric/electronic contact sensor.

From the foregoing, persons of ordinary skill in the art will appreciate that a universal and expandable weapon has been provided in which the actual basic model remains practically unchanged, while the safety components can be modified according to the state of the art, according to legal requirements, and/or in accordance with the requirements of the client N even after the weapon has been manufactured and sold.

The modules **1** disclosed above may be used with many types of weapons, but is particularly well suited for use with a weapon with a handle that has an integrated pistol stock, in particular, with a weapon with a single-piece plastic handle. Such a weapon does not give an amateur craftsman the opportunity to get to the mechanism and manipulate it by removing the pistol stocks.

Although certain example methods and apparatus have been described herein, the scope of coverage of this patent is not limited thereto. On the contrary, this patent covers all methods, apparatus and articles of manufacture fairly falling within the scope of the appended claims either literally or under the doctrine of equivalents.

What is claimed is:

1. A firearm comprising:

a housing having a handle;

a safety to selectively prevent firing;

a first module removably attachable to the handle, the first module containing an electronic identification device identifying a first authorized user, the electronic identification device controlling the safety to prevent firing by unauthorized persons and to permit firing by the first authorized user when the first module is attached to the handle; and

a second module removably attachable to the handle in place of the first module such that the first and second modules are interchangeable, the second module interacting with the safety when the second module is attached to the handle to affect the ability to fire the firearm, wherein the second module releases the safety for all users.

2. A firearm as defined in claim **1**, further comprising a memory associated with the electronic identification device.

3. A firearm as defined in claim 1, wherein the electronic identification device is powered by current generated by movement of a first part of the firearm relative to a second part of the firearm.

4. A firearm as defined in claim 3, wherein the first part comprises a magnet carried by a magazine.

5. A firearm as defined in claim 4, wherein the magazine is stored in the handle.

6. A firearm as defined in claim 3, wherein the first part comprises a breech or a structure that is movable together with the breech.

7. A firearm as defined in claim 1, further comprising a piezoelectric element positioned in at least one of the housing and the first module such that recoil stress caused by firing of a shot causes the piezoelectric element to generate current to power the electronic identification device.

8. A firearm as defined in claim 7 wherein the recoil stress is a result of movement of a recoil spring, a breech, or a powder-gas driven device.

9. A firearm as defined in claim 1, further comprising a magazine having an identification code which is read and recorded by the electronic identification device.

10. A firearm as defined in claim 9 wherein the electronic identification device evaluates the identification code associated with the magazine to identify the first authorized user.

11. A firearm as defined in claim 1, further comprising a microphone coupled to the electronic identification device.

12. A firearm as defined in claim 11, wherein the electronic identification device comprises a voice recognition device or a word recognition device.

13. A firearm as defined in claim 12, wherein the voice recognition device is structured to recognize a normal voice, a whisper and a hoarse voice of the first authorized user.

14. A firearm as defined in claim 12, wherein the word recognition device is structured to recognize a word spoken in a normal voice, a whisper and a hoarse voice of the first authorized user.

15. A firearm as defined in claim 12, wherein the microphone is connected with a memory which records data indicative of spoken commands from the first authorized user.

16. A firearm as defined in claim 15, further comprising a timer or time signal receiver, and wherein the data indicative of the spoken command comprises a firing time.

17. A firearm as defined in claim 11, wherein the microphone is connected with a memory which records data reflecting firing of shots.

18. A firearm as defined in claim 17, further comprising a timer or time signal receiver, and wherein the data reflecting firing of shots comprises a firing time.

19. A firearm as defined in claim 17, wherein more than one user is the authorized user, and the data reflecting flung of shots comprises an identification of a shooter of the shots.

20. A firearm as defined in claim 2, wherein the memory stores an event indicative of a maintenance requirement of the firearm.

21. A firearm as defined in claim 1, wherein the electronic identification device comprises a sensor for iris recognition, the sensor being directed toward an expected location of an aiming eye of a user attempting to fire the firearm.

22. A firearm as defined in claim 1, wherein the safety prevents firing when the first module is removed from the firearm.

23. A firearm as defined in claim 1, further comprising a contact sensor which activates the safety the contact sensor is released.

24. A firearm as defined in claim 2, wherein the firearm has a firearm identification number and the firearm identification number is written to the memory to record connection of the module to the firearm.

25. A firearm comprising:

a housing having a handle;

a safety located in the housing to selectively prevent firing;

a first module removably attachable to the handle and containing an electronic identification device to identify an authorized user, the electronic identification device controlling the safety to prevent firing by unauthorized persons and to permit firing by the authorized user; and

a second module for installation in place of the first module, wherein the second module releases the safety for all users.

* * * * *